SANSUI AU-7700 SCHEMATIC DIAGRAM

* Design and specifications subject to change without notice for improvements.

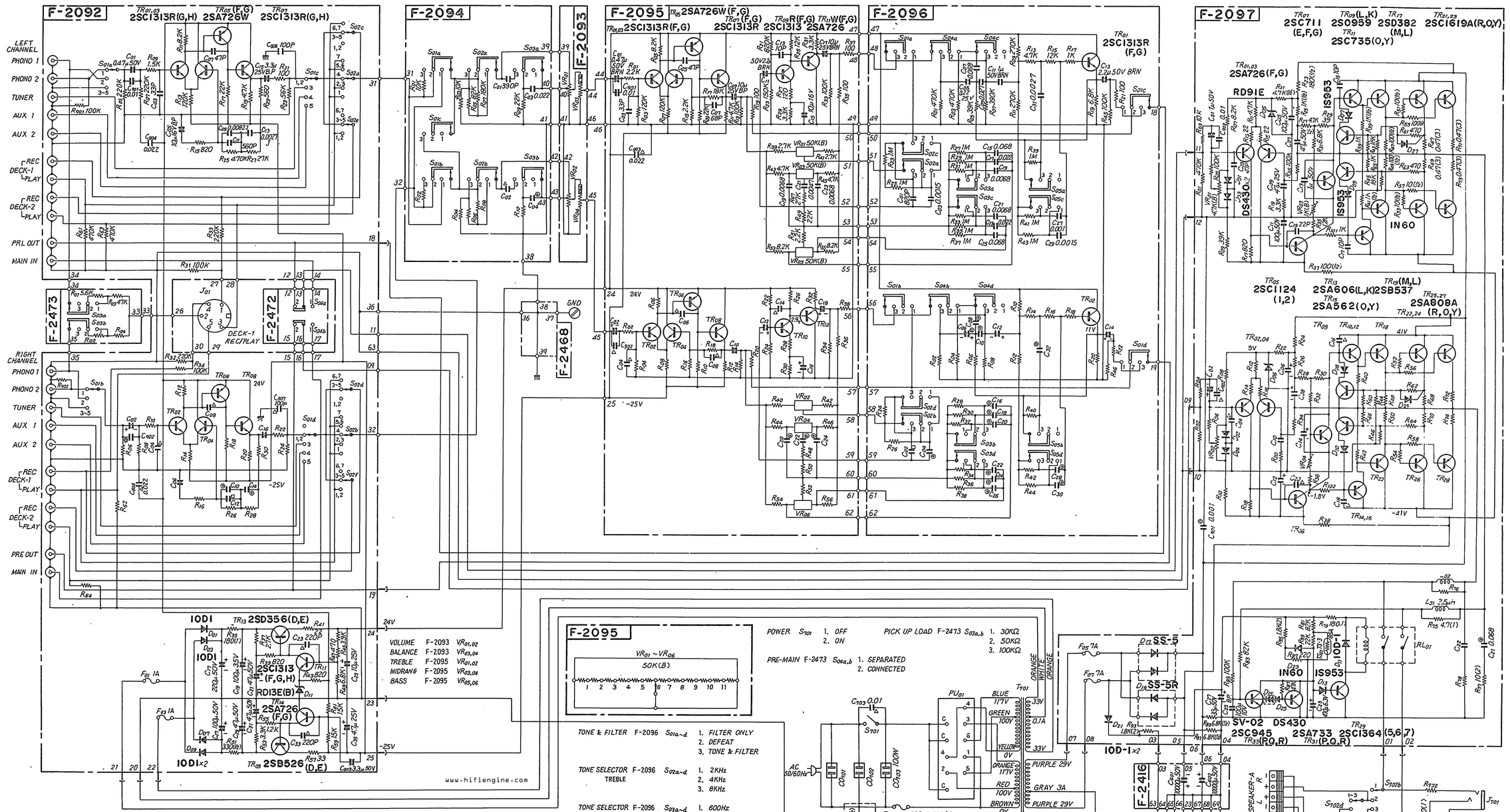

Printed in Japan (84M200)