SERVICE MANUAL

SOLID-STATE AM/FM STEREO TUNER AMPLIFIER

SANSUI 350A

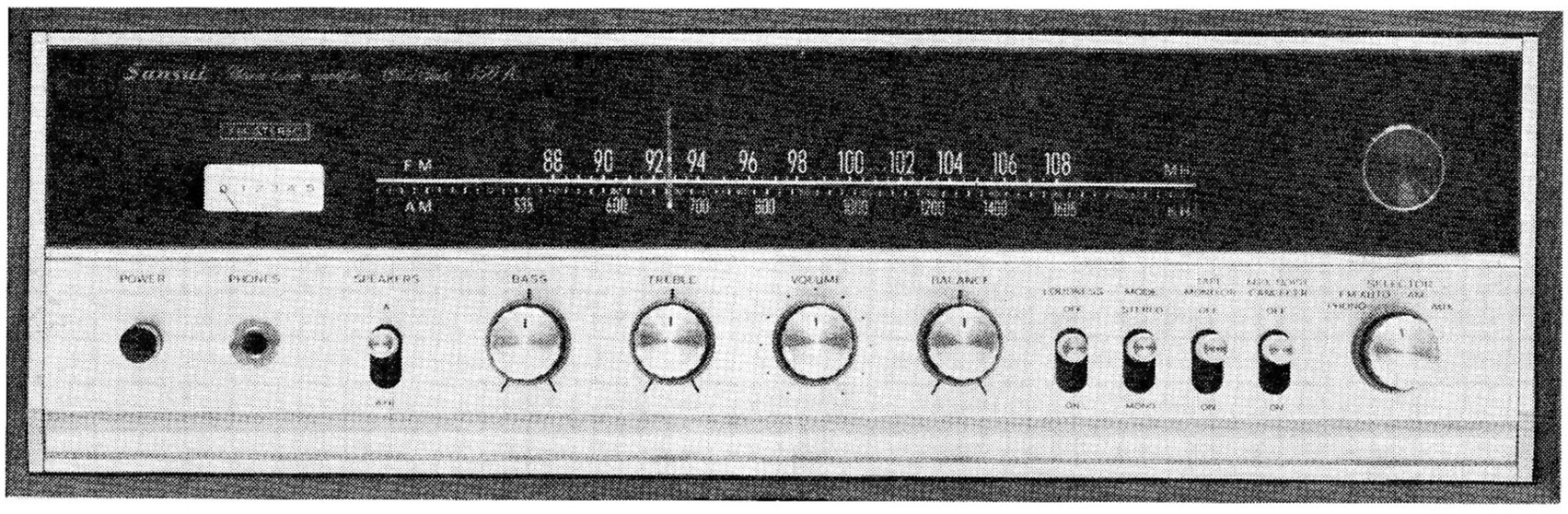

Sansui

SANSUI ELECTRIC CO., LTD.

www.hifiengine.com

CONTENTS

GENERAL TROUBLESHOOTING CHART 3, 4
DISASSEMBLY PROCEDURE..... 5
BLOCK DIAGRAM 6
ALIGNMENT..... 7, 8, 9, 10
SCHEMATIC DIAGRAM 11, 12
PRINTED CIRCUIT BOARDS AND PARTS LIST
..... 13, 14, 15, 16, 17, 18, 19, 20, 21
OTHER PARTS AND THEIR POSITION ON CHASSIS
..... 21, 22

www.hifiengine.com

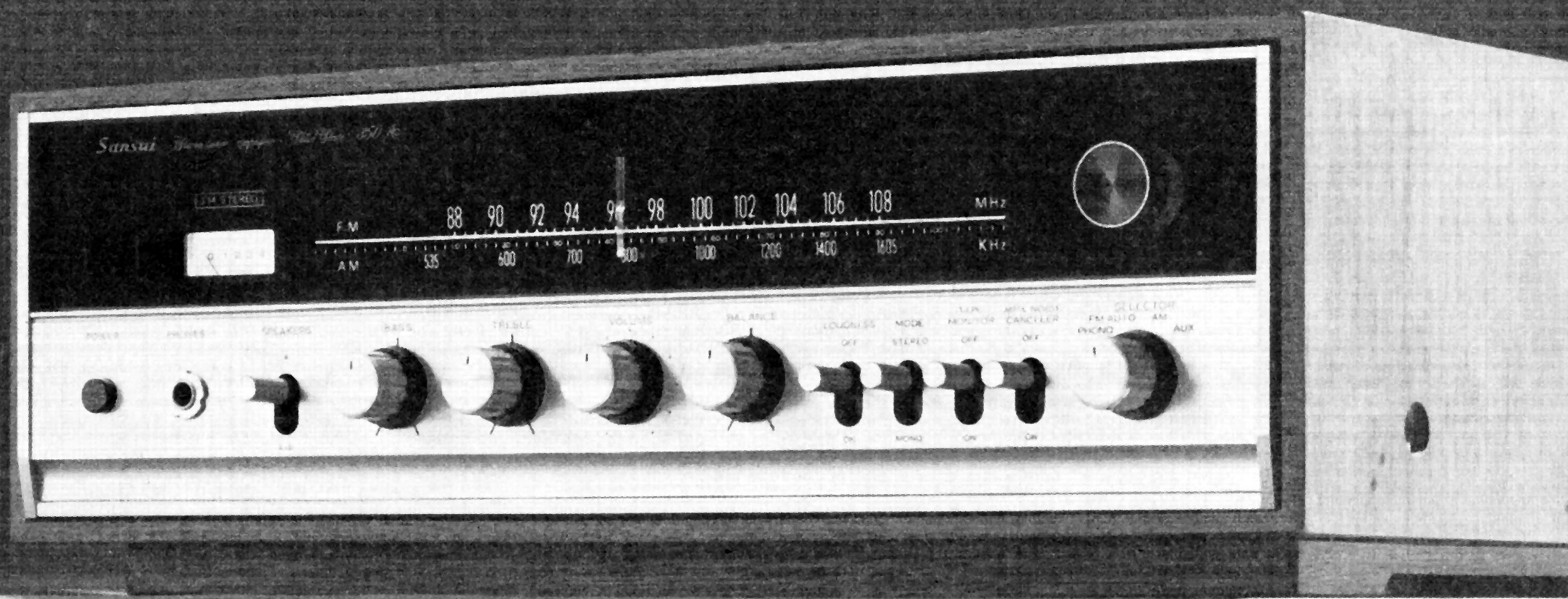
Sansui
FM STEREO
FM
88 90 92 94 96 98 100 102 104 106 108
MHz
AM
535 600 700 800 1000 1200 1400 1605
KHz
POWER
PHONES
SPEAKERS
BASS
TREBLE
VOLUME
BALANCE
LOUDNESS
OFF
MODE
STEREO
MONO
TAPE MONITOR
OFF
ON
ANTI NOISE CANCELLER
OFF
ON
SELECTOR
FM AUTO
PHONO
AM
AUX

GENERAL TROUBLESHOOTING CHART

If the amplifier is otherwise operating satisfactorily the more common causes of trouble may generally be attributed to the following:

1. Incorrect connections or loose terminal contacts. Check the speakers, record player, tape deck, antenna and line cord.
2. Improper operation. Before operating any audio component, be sure to read the manufacturer's instructions.
3. Improper location of audio components. The proper positioning of components, such as speakers and turntable, is vital to stereo.
4. Defective audio components.

Following are some other common causes of malfunction and what to do about them.

PROGRAM	SYMPTOM	PROBABLE CAUSE	WHAT TO DO
AM, FM or MPX reception	**a.** Constant or intermittent noise heard at certain times or in a certain area.	* Discharge or oscillation caused by electrical appliances, such as fluorescent lamps, TV sets, D.C. motors, rectifier and oscillator * Natural phenomena, such as atmospherics, static, and thunderbolt. * Insufficient antenna input due to reinforced concrete walls or long distance from the station * Wave interference from other electrical appliances	* Attach a noise limiter to the electrical appliance that causes the noise, or attach it to the power source of the amplifier. * Install an outdoor antenna and ground the amplifier to raise the signal-to-noise ratio. * Reverse the power cord plug-receptacle connections. * If the noise occurs at a certain frequency, attach a wave trap to the ANT. input. * Place the set away from other electrical appliances.
	b. Needle of the tuning meter does not move sharply.	* Needle movement is not necessarily related to the sensitivity of the amplifier.	* Tune the set for maximum signal strength.
	c. Zero point of the meter moves greatly.	* Regional difference in field intensity.	* The unit is not at fault.
AM reception	**a.** Noise heard at a particular time of day, in a certain area or over part of the dial.	* Natural phenomenon.	* Install an antenna for maximum antenna efficiency. See "ANTENNA" in the Operating Instructions. * In some cases, the noise can be eliminated by grounding the amplifier or reversing the power cord plug-receptacle connections.
	b. High-frequency noise	* Adjacent-channel interference or beat interference * TV set is too close to the audio system	* Although such noise cannot be eliminated by the amplifier, it is advisable to turn the TREBLE control from midpoint to left. * Place the TV set away from the audio system.
FM reception	**a.** Noisy	* Poor noise limiter effect or too low SN ratio due to insufficient antenna input.	* Adjust the antenna (supplied) for maximum signal strength. * If this is not effective, use an outdoor antenna designed exclusively for FM. When you use a TV antenna for both TV and FM with a splitter make sure TV reception is not affected. * An excessively long antenna may cause noise.

NOTE: FM reception is affected considerably by the conditions of the transmitting stations: power and antenna efficiency. As a result, you may receive one station quite well while having difficulty receiving another station.

www.hifiengine.com

PROGRAM	SYMPTOM	PROBABLE CAUSE	WHAT TO DO
FM reception (Cont'd)	**b.** A series of pops is heard	* Ignition noise caused by an automobile engine.	* Increase the height of antenna or raise the antenna input as previously described.
	c. Distortion or no sound	* Out of tune due to frequency swing	* Retune the signal.
	d. Tuning noise between stations	* This noise results from the nature of FM reception. As the station signal becomes weak, the noise limiter effect is decreased. The amplification of the limiter, in turn, is enlarged and a noise is generated.	* Tune the signal at reduced volume.
FM-MPX reception	**a.** Noise heard during FM-MPX reception while not heard during FM mono reception	* The service area of the FM-MPX broadcast is only half that of the FM mono broadcast.	* Install the antenna for maximum antenna input. * Turn the TREBLE control from midpoint to left.
	b. Channel separation becomes worse during reception.	* Excess heat	* Make sure that air can flow underneath the amplifier.
	c. The stereo indicator comes on and off.	* Interference * Station signal is weak	* The indicator is not at fault. * Adjust VR_{401}
	d. The stereo indicator comes on and off even though a stereo station is not received.	* Interference	* The indicator is not at fault. * Adjust VR_{401}
Record playing or tape playback	**a.** Hum or howling	* Record player placed directly on the speaker box. * Use of unshielded wire. * Loose terminal contact. * Shielded wire too close to line cord, fluorescent lamp or other electrical appliances. * Nearby amateur radio station or TV transmission antenna.	* Put a cushion between the player and the speaker box or separate them. * The connecting shield wire should be as short as possible. * Turn the BASS control from midpoint to left. * Consult the nearest Radio Regulatory Bureau.
	b. Surface noise	* Worn or old record * Dusty record * Worn pick-up needle * Dusty needle * Improper needle pressure	* Remove dust from record and/or needle. * Replace needle. * Correct needle pressure. * Turn the TREBLE control properly from midpoint to left.
Overall stereo program	The BALANCE control is not at midpoint when equal sound comes from left and right channels	* It is important to adjust the control for equal sound from both channels. It should not always be set to midpoint.	* Set the MODE switch to the MONO position and then set the BALANCE control to the position where equal sound comes from both channels.

www.hifiengine.com

DISASSEMBLY PROCEDURE

REMOVING THE FRONT PANEL, WOOD CASE AND BOTTOM PLATE

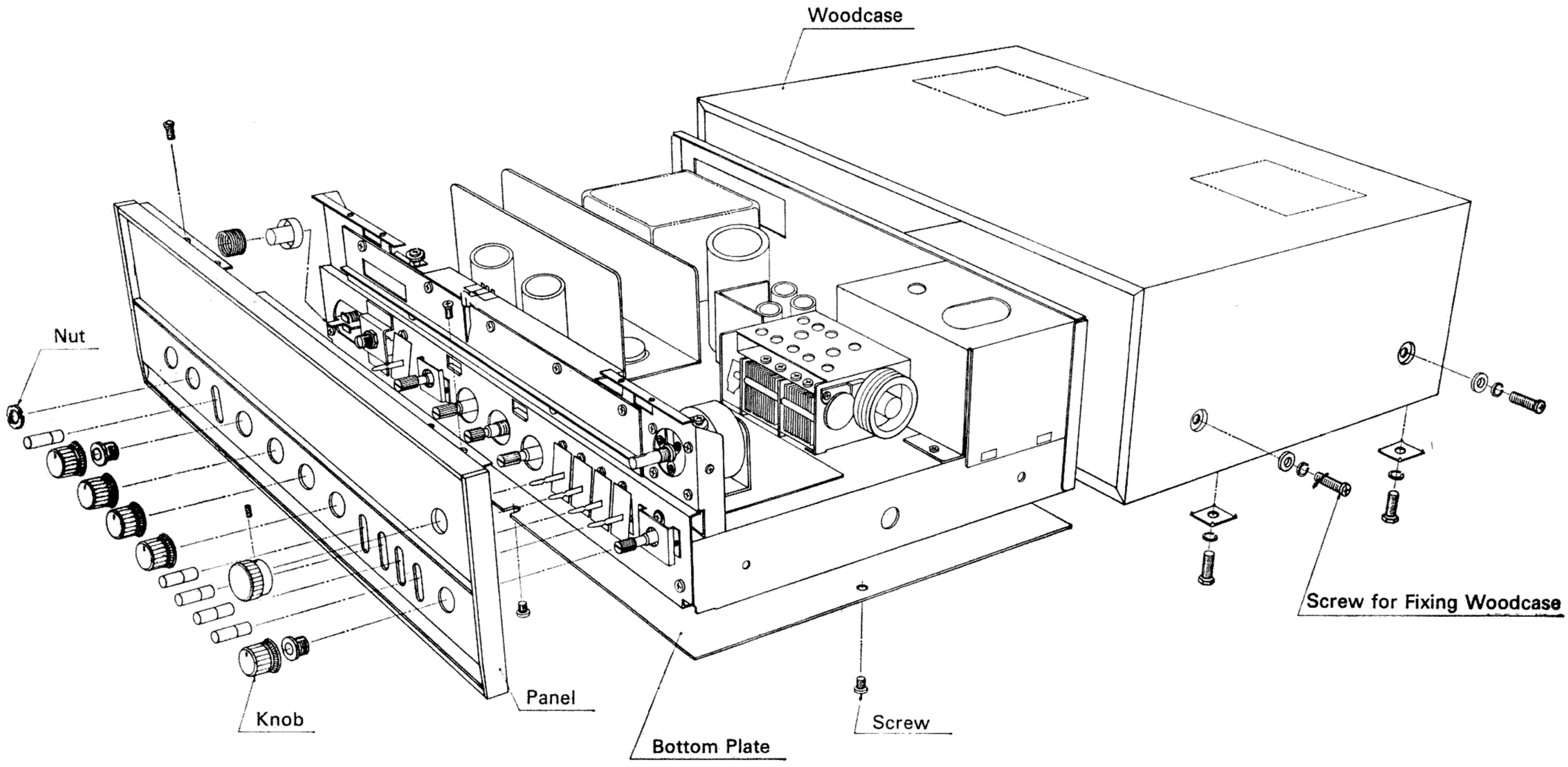

DIAL MECHANISM

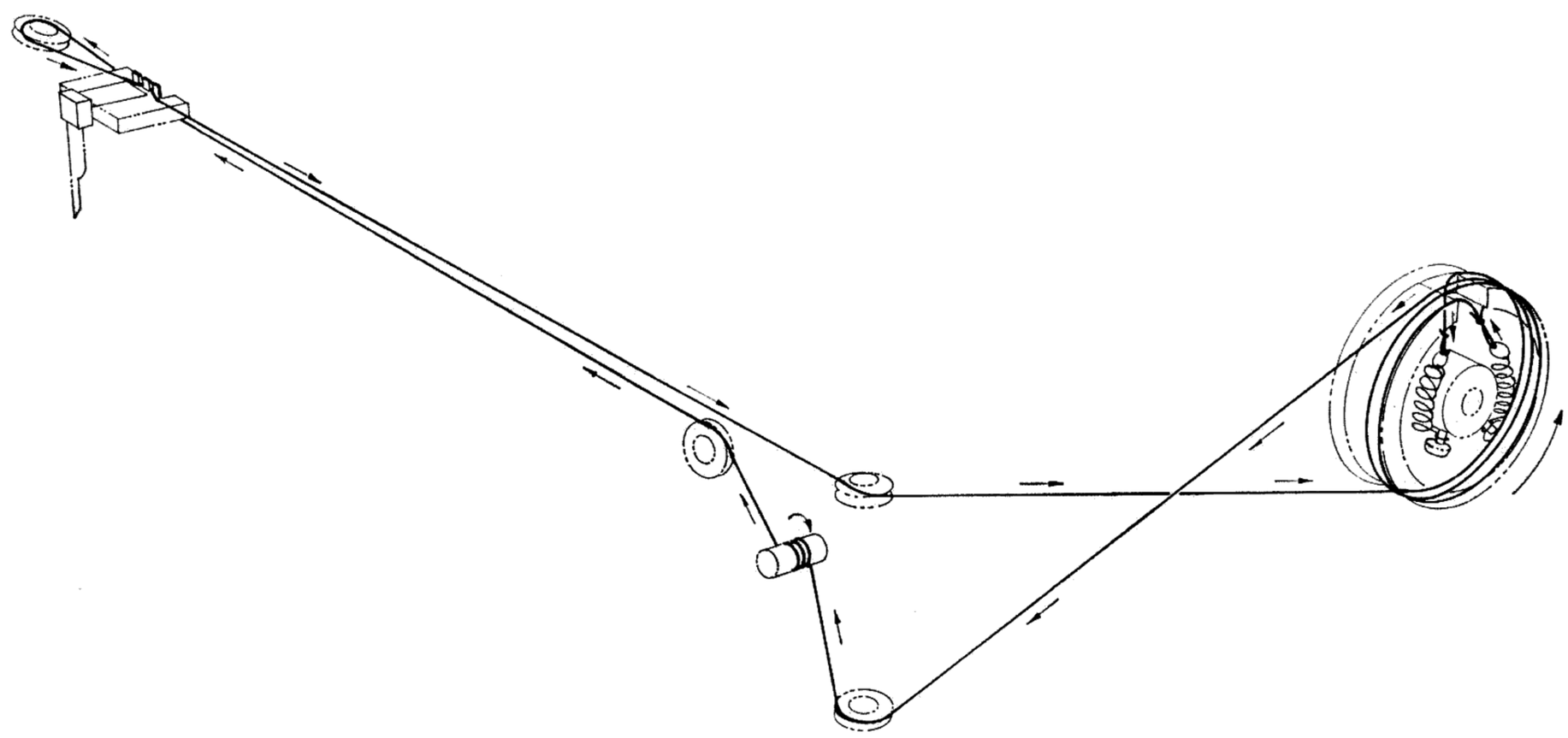

www.hifiengine.com

BLOCK DIAGRAM

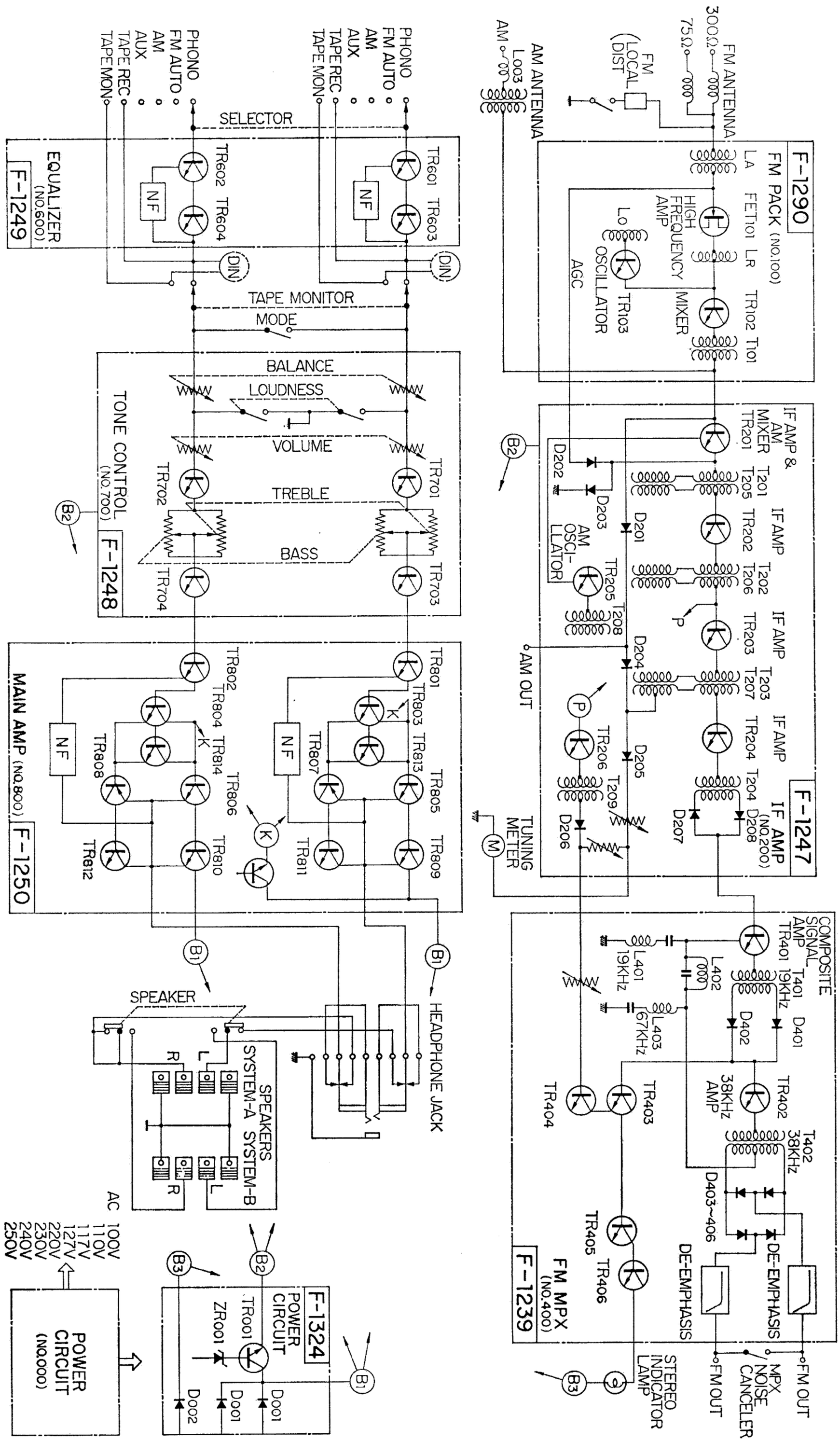

www.hifiengine.com

ALIGNMENT

TEST POINTS

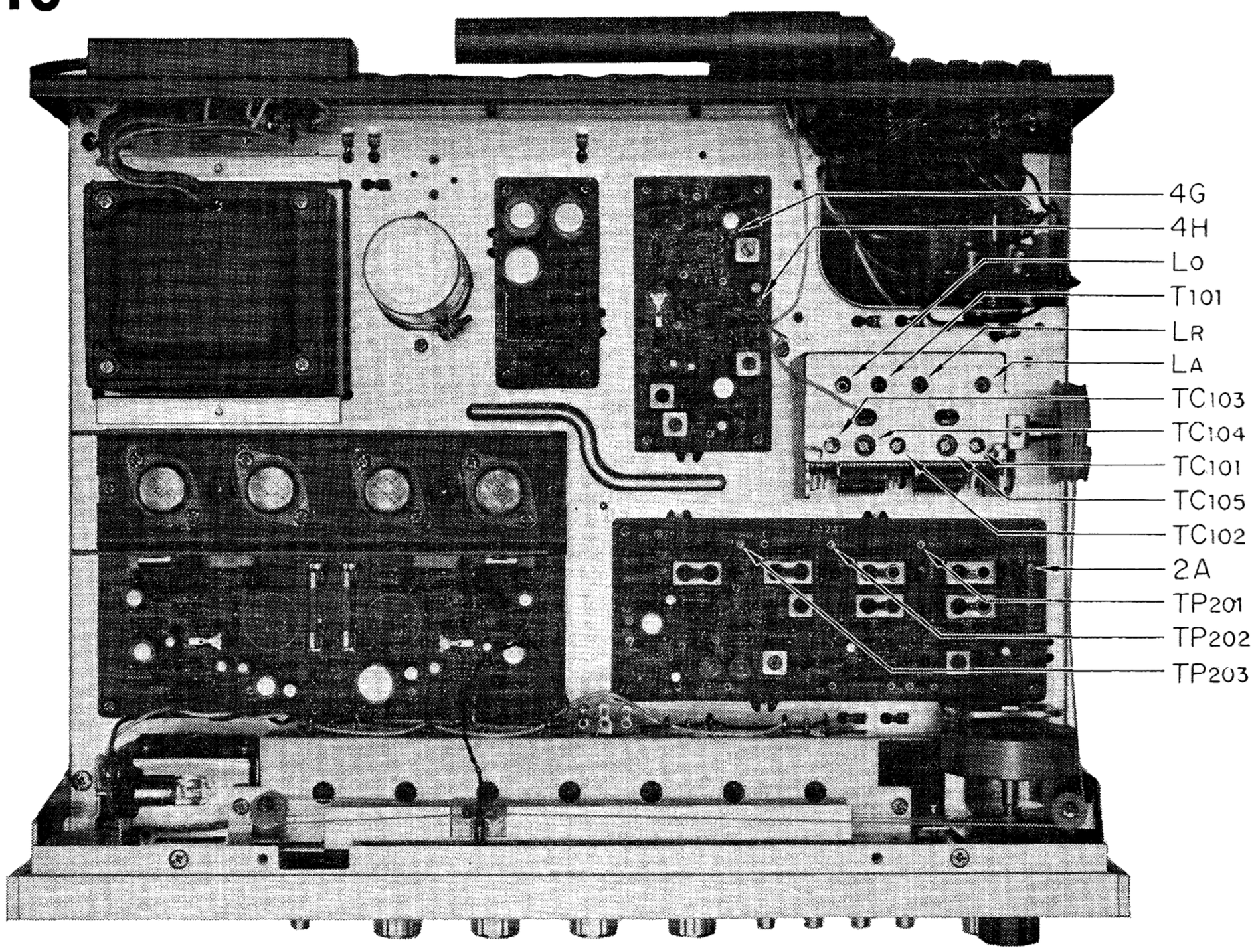

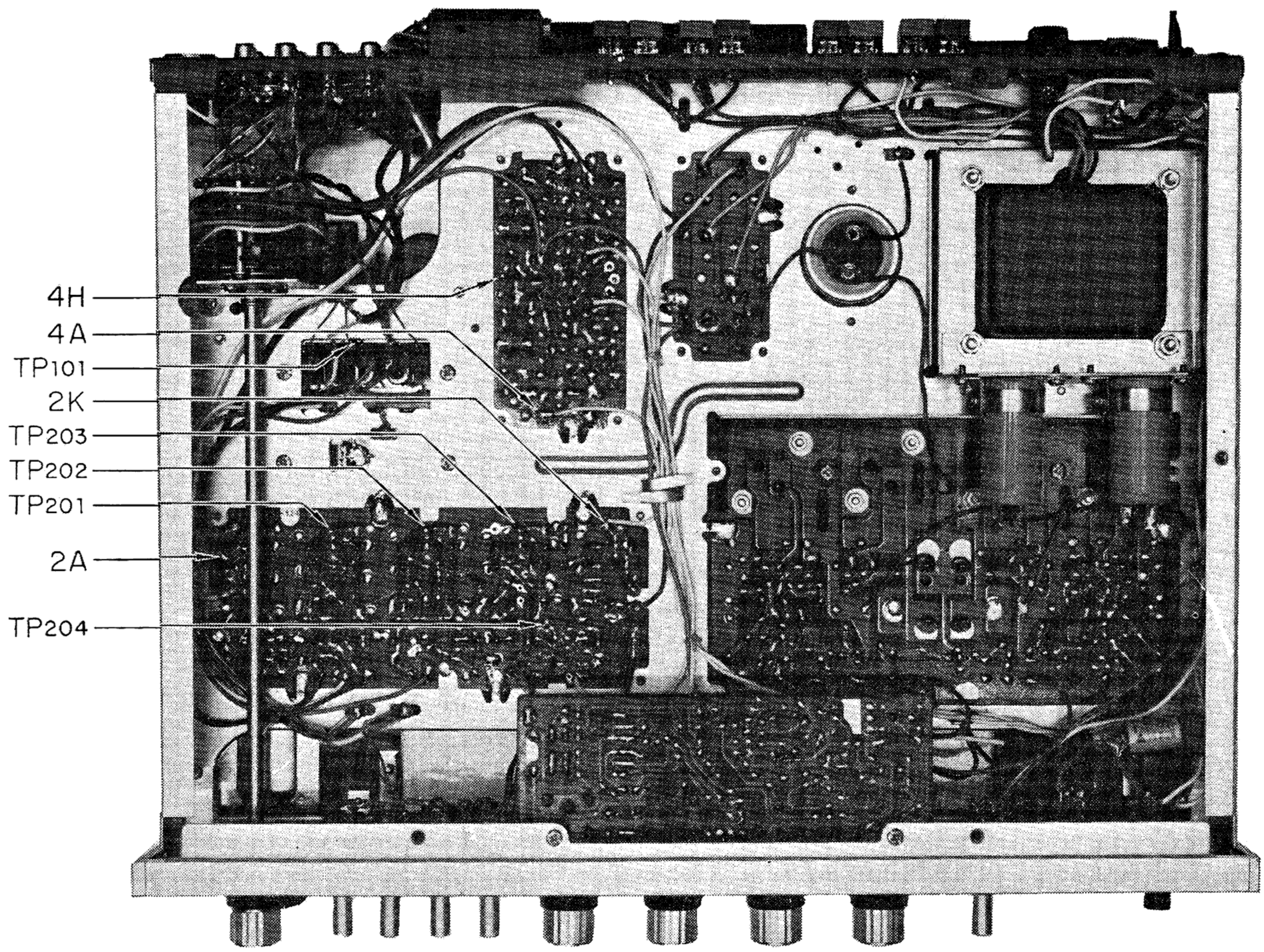

www.hifiengine.com

FM ALIGNMENT PROCEDURE

NOTE: To align, set the FM signal generator level to minimum, turn tuning gang fully, center carrier wave, and set pointer to reference mark.

STEP	ALIGN	GENERATOR	FEED SIGNAL	OUTPUT INDICATOR	DIAL SETTING	ADJUST	ADJUST FOR
1.	IF Transformer	10.7 MHz ±200 kHz	Sweep signal is sent to TP_{101} via the 10pF ceramic capacitor	Oscilloscope is connected to TP_{201}, TP_{202} and TP_{203} via the 0.02μF ceramic capacitor		Primary and secondary sides of T_{201}, T_{202}, and T_{203}	Best I.F. wave form
2.	Discriminator	10.7 MHz ±200 kHz	Sweep signal is sent to 2A via the 0.02μF ceramic capacitor	Oscilloscope is connected to 2K via the 0.05μF ceramic capacitor		FM Discriminator T_{204} primary and secondary	S curve
3.	O.S.C	88 MHz 400 Hz 100% Modulation	To antenna terminals	Oscilloscope and V.T.V.M. at output load	88 MHz	O.S.C. coil L_0	Maximum
4.	O.S.C	108 MHz 400 Hz 100% Modulation	To antenna terminals	Oscilloscope and V.T.V.M. at output load	108 MHz	O.S.C. trimmer TC_{103}	Maximum
5.	Repeat 3&4						
6.	RF Amp. Circuit	90 MHz 400 Hz 100% Modulation	To antenna terminals	Oscilloscope and V.T.V.M. at output load	90 MHz	Antenna Coil L_A and L_R	Maximum
7.	RF Amp. Circuit	106 MHz 400 Hz 100% Modulation	To antenna terminals	Oscilloscope and V.T.V.M. at output load	106 MHz	Trimmer TC_{101} and TC_{102}	Maximum
8.	Repeat 6&7						

FM IF CHARACTERISTIC

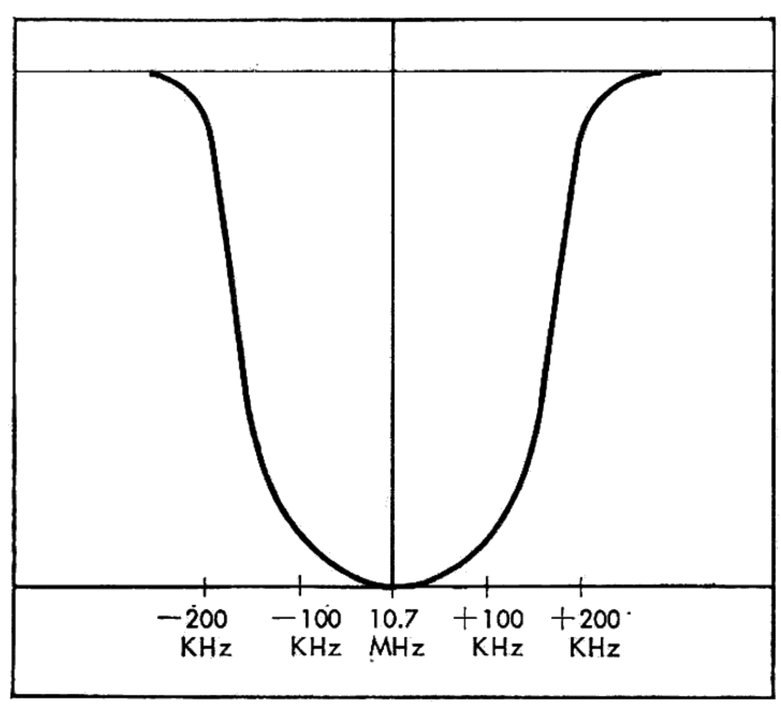

FM DISCRIMINATOR CHARACTERISTIC

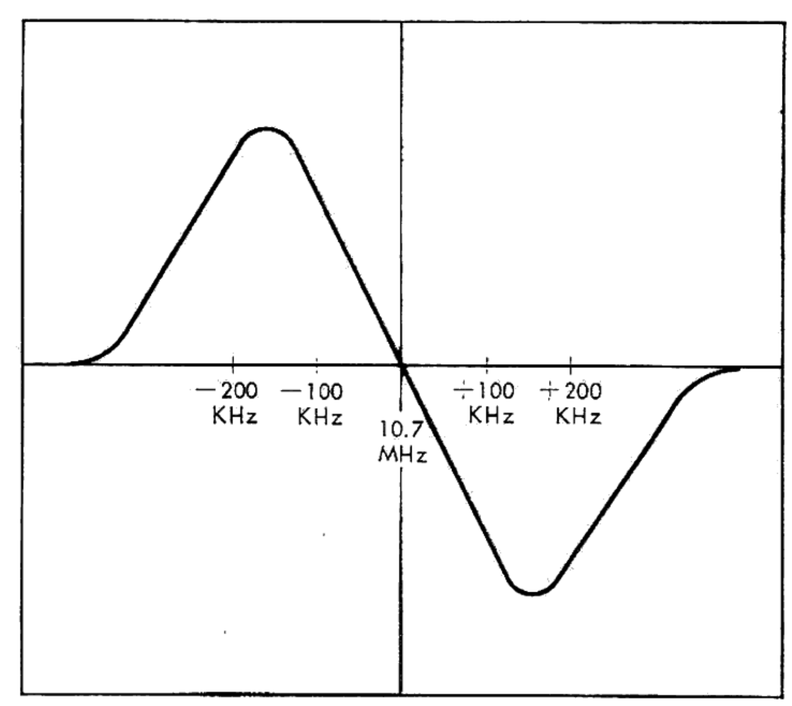

www.hifiengine.com

ALIGNMENT

FM MULTIPLEX ALIGNMENT PROCEDURE

1. Do not attempt to align the Multiplex Circuit unless the following equipment is available:

a. Multiplex Stereo Generator **b.** Oscilloscope **c.** AC. V.T.V.M. **d.** Audio Oscillator **e.** FM Signal Generator

STEP	ALIGN	GENERATOR	FEED SIGNAL	OUTPUT INDICATOR	ADJUST	ADJUST FOR
1.	19 kHz Trap	19 kHz Audio Signal	Connect to 4A	V.T.V.M. at 4G	L_{401}	Minimum
2.	67 kHz Trap	67 kHz Audio Signal	Connect to 4A	V.T.V.M. at 4G	L_{403}	Minimum
3.	19 kHz Transformer	FM Signal Gen. Modulated 30% by STEREO Gen. sub-channel	Antenna terminals Tune to signal	V.T.V.M. and Oscilloscope at 4H	T_{401}	Maximum
4.	38 kHz Transformer	FM Signal Gen. Modulated 30% by STEREO Gen.	Antenna terminals Tune to signal	V.T.V.M. and Oscilloscope at 4H	T_{402}	Maximum
5.	38 kHz Transformer and Separation VR	FM Signal Gen. Modulated 30% by STEREO Signal Gen. channel-L	Antenna terminals Tune to signal	V.T.V.M. and Oscilloscope at output load channel-R	T_{402} within ¼ turn and Separation VR (VR_{601})	Channel-R Minimum

www.hifiengine.com

AM ALIGNMENT PROCEDURE

NOTE: To align, set AM signal Generator level to **minimum**.

STEP	ALIGN	GENERATOR	FEED SIGNAL	OUTPUT INDICATOR	DIAL SETTING	ADJUST	ADJUST FOR
1.	I.F. Transformer	455 kHz ±30 kHz Sweep-generator	2A	Oscilloscope and V.T.V.M. is connected to TP_{204}		Primary and secondary sides from the 1st I.F.T.(T_{205}~T_{207})	Best I.F. wave form
2.	O.S.C.	AM-generator 600 kHz 400 Hz 30% Modulation	Antenna terminals	Oscilloscope and V.T.V.M. at output load	600kHz	O.S.C. Coil T_{208}	Maximum
3.	O.S.C.	AM-generator 1400 kHz 400 Hz 30% Modulation	Antenna terminals	Oscilloscope and V.T.V.M. at output load	1400kHz	O.S.C. Trimmer cap. TC_{105}	Maximum
4.	Repeat 2 and 3						
5.	Antenna circuit	AM-generator 600 kHz 400 Hz 30% Modulation	Antenna terminals	Oscilloscope and V.T.V.M. at output load	600kHz	Ferrite bar Antenna coil L_{002}	Maximum
6.	Antenna circuit	AM-generator 1400 kHz 400 Hz 30% Modulation	Antenna terminals	Oscilloscope and V.T.V.M. at output load	1400kHz	Antenna circuit Trimmer TC_{104}	Maximum
7.	Repeat 5 and 6						

AM IF CHARACTERISTIC

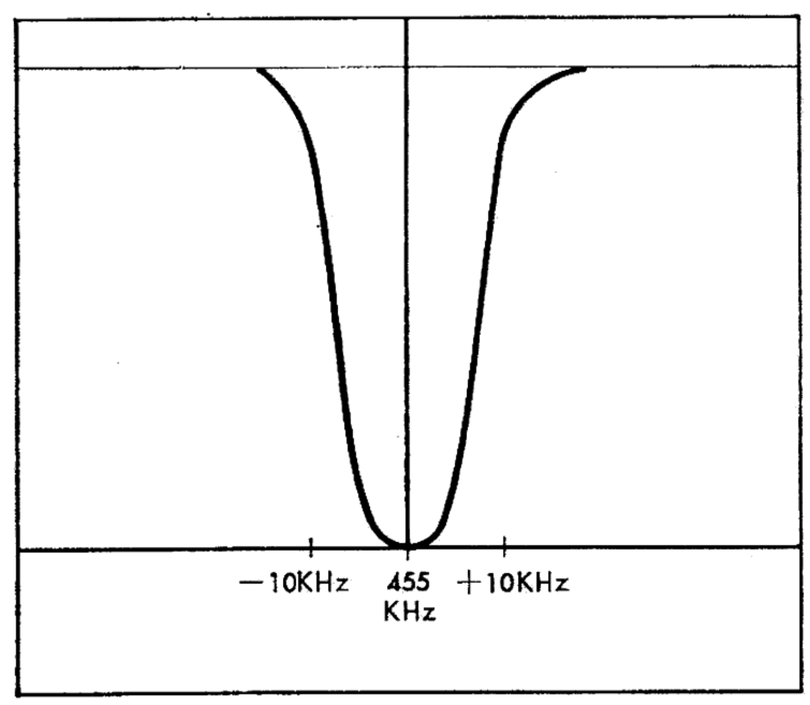

www.hifiengine.com

SCHEMATIC DIAGRAM

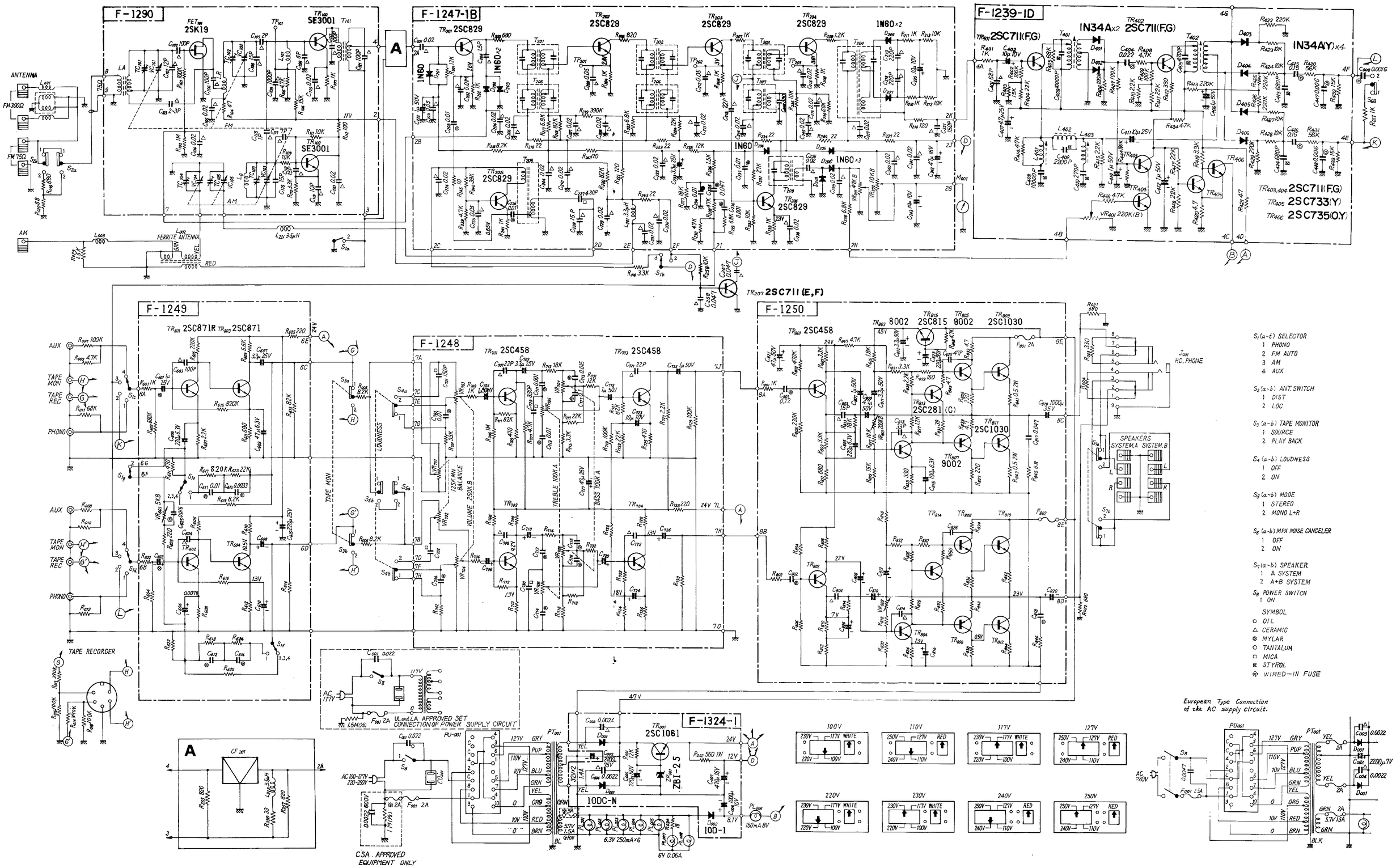

PRINTED CIRCUIT BOARDS AND PARTS LIST

X: Parts No. **Y:** Parts Name **Z:** Position of Parts

AM, FM IF BLOCK ⟨F-1247-1B⟩

X	Y					Z
R201	12kΩ				(0101123)	2 D
R202	1kΩ				(0101102)	1 D
R203	680Ω				(0101681)	1 D
R204	1kΩ				(0101102)	1 C
R205	820Ω				(0101821)	1 C
R206	1kΩ				(0101102)	1 B
R207	1kΩ				(0101102)	1 B
R208	1kΩ				(0101102)	1 A
R209	1.2kΩ				(0101122)	1 B
R210	1kΩ				(0101102)	1 A
R211	1kΩ				(0101102)	1 A
R212	10kΩ				(0101103)	1 A
R213	10kΩ				(0101103)	1 A
R214	120Ω				(0101121)	1 A
R215	8.2kΩ				(0101822)	2 D
R216	22Ω				(0101220)	2 D
R217	6.8kΩ				(0101682)	1, 2 D
R218	82kΩ				(0101823)	1, 2 D
R219	390kΩ				(0101394)	1, 2 C
R220	82kΩ				(0101823)	2 C
R221	120Ω				(0101121)	2 C
R222	6.8kΩ				(0101682)	1, 2 C
R223	22Ω	±10%	¼W	CB.	(0101220)	2 C
R224	12kΩ				(0101123)	1, 2 C
R225	12kΩ				(0101123)	2 B
R226	1.5kΩ				(0101152)	2 B
R227	18kΩ				(0101183)	2 A
R228	47kΩ				(0101473)	2 A
R229	6.8kΩ				(0101682)	2 A
R230	4.7kΩ				(0101472)	2 A
R231	27kΩ				(0101273)	2 B
R232	10kΩ				(0101103)	2 B
R233	1kΩ				(0101102)	2 B
R234	22Ω				(0101220)	2 B
R235	10kΩ				(0101103)	1, 2 B
R236	6.8kΩ				(0101682)	1 B
R237	22Ω				(0101220)	2 A
R238	6.8kΩ				(0101682)	2 A
R239	4.7kΩ				(0101472)	2 D
R240	39kΩ				(0101393)	2 D
R241	1kΩ				(0101102)	2 D
R242	120Ω				(0101121)	2 C
R243	22Ω				(0101220)	2 C
R244	22Ω				(0101220)	2 B
R245	10Ω				(0101100)	1 D
VR201	47kΩ (B)				(1035260)	2 A
VR202	10kΩ (B)				(1035220)	2 B
C201	0.02μF	+80 −20 %	25V	CE.	(0659005)	1 D
C202	0.01μF	±20%	50V	CE.	(0652103)	1 D
C203	0.01μF	±10%	50V	MY.	(0601107)	1 D
C204	0.02μF	+80 −20 %	25V	CE.	(0659005)	1 D
C205	1.5pF	±20%	50V	CE.	(0652159)	1 D
C206	0.02μF				(0659005)	2 D
C207	0.02μF				(0659005)	2 D
C208	0.02μF				(0650005)	2 C
C209	0.05μF	+80 −20 %	25V	CE.	(0659007)	1 C
C210	0.02μF				(0659005)	2 C
C211	0.02μF				(0659005)	2 C
C212	0.05μF				(0659007)	1 B
C213	2.2pF	±20%	50V	CE.	(0652229)	1, 2 B

X	Y					Z
C214	0.02μF					2 B
C215	0.02μF	+80 −20 %	25V	CE.	(0659005)	1 A
C216	0.02μF					1 A, B
C217	0.02μF					1 A
C218	220pF	±20%	50V	CE.	(0652221)	1 A
C219	220pF					1 A
C220	10μF		10V	EL.	(0511100)	1 A
C221	150pF	±20%	50V	CE.	(0652151)	1 A
C222	1μF		50V	EL.	(0515109)	2 D
C223	0.05μF				(0659007)	2 D
C224	0.02μF	+80 −20 %	25V	CE.	(0659005)	2 D
C225	0.05μF				(0659007)	2 D
C226	0.01μF	±10%	50V	MY.	(0601106)	2 D
C227	510pF	±5%	125V	ST.	(0623511)	2 D
C228	22pF	±20%	50V	CE.	(0652220)	2 D
C229	0.02μF					2 C
C230	0.02μF	+80 −20 %	25V	CE.	(0659005)	2 B, C
C231	0.02μF					2 C
C232	0.02μF					2 C
C233	3.3μF		50V	EL.	(0513339)	2 C
C234	0.01μF				(0601106)	2 A
C235	0.047μF	±10%	50V	MY,	(0601476)	2 A
C236	0.001μF				(0601105)	2 A
C237	0.01μF				(0601106)	1 B
C238	0.02μF					2 C
C239	0.02μF	+80 −20 %	25V	CE.	(0659005)	2 A
C240	0.02μF					1 B
C241	0.02μF					1 A
C242	47μF		16V	EL.	(0512470)	1, 2 A
C243	10μF		10V	EL.	(0511100)	2 A
C244	0.02μF	+80 −20 %	25V	CE.	(0659005)	2 C
C245	0.02μF					2 B
C246	330pF	±20%	50V	CE.	(0652331)	
TR201	2SC829 (B, C)					1 D
TR202	2SC829 (B, C)					1 D
TR203	2SC829 (B, C)					1 C
TR204	2SC829 (B, C)				(0305460, 1)	1 B
TR205	2SC829 (B, C)					2 D
TR206	2SC829 (B, C)					2 B
D201	IN60					2 D
D202	IN60					1 D
D203	IN60					2 D
D204	IN60					1 B
D205	IN60				(0310330)	1 B
D206	IN60					2 B
D207	IN60					1 A
D208	IN60					1 A
T201	FM IFT				(4235610)	1 D
T202	FM IFT	10.7MHz			(4235610)	1 C
T203	FM IFT				(4235600)	1 B
T204	FM Detector	10.7MHz			(4235620)	1 A
T205	AM IFT				(4230370)	1 D
T206	AM IFT	455kHz			(4230370)	1 C
T207	AM IFT				(4230380)	1 B
T208	AM OSC				(4220190)	2 D
T209	FM Meter Transformer				(4235400)	2 B
L201	3.5μH RF Choke Coil				(4290010)	2 C

www.hifiengine.com

CB : Carbon Resistor
SL : Solid Resistor
CM: Cement Resistor
MY: Mylar Capacitor
EL : Electrolytic Capacitor

MC: Mica capacitor
O : Oil capacitor
ST : Styrol Capacitor
CE : Ceramic Capacitor
TA : Tantalum Capacitor

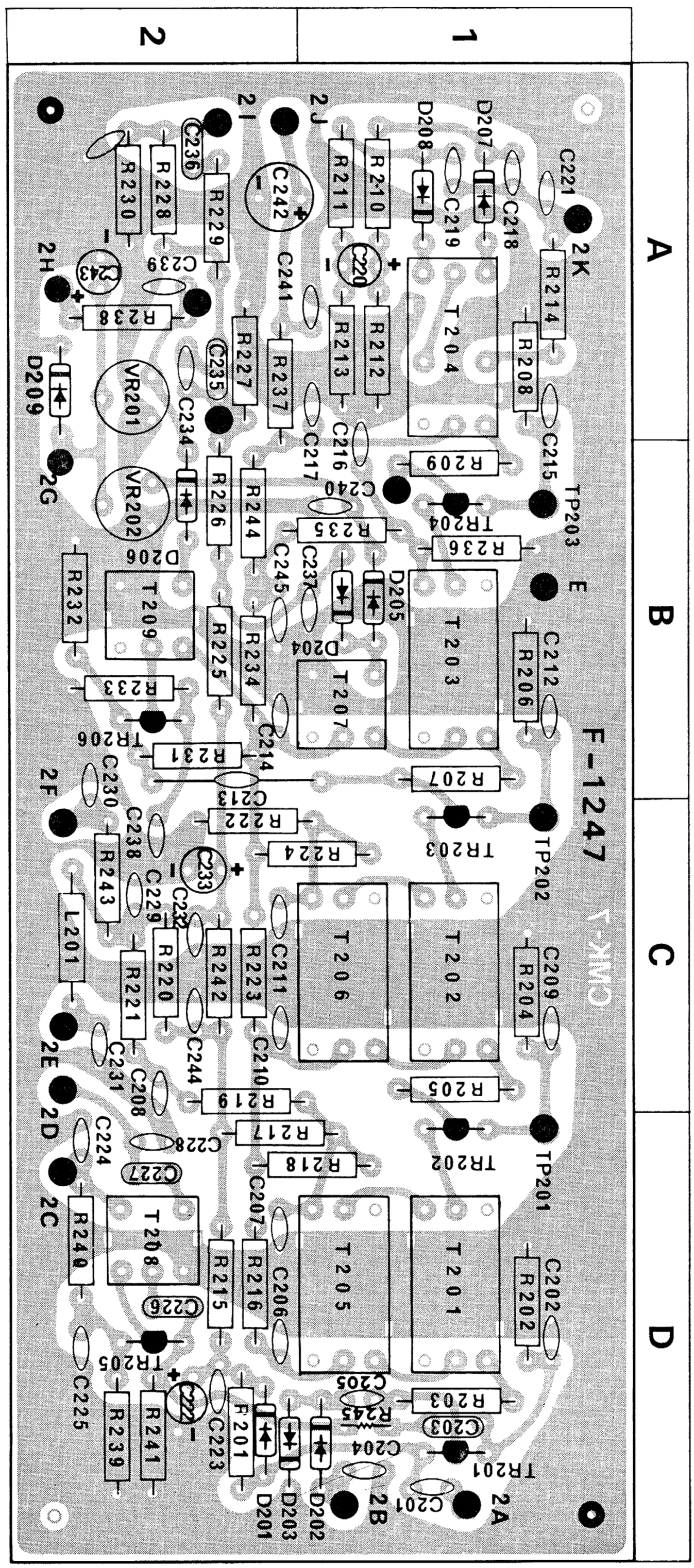

PRINTED CIRCUIT BOARDS AND PARTS LIST

X: Parts No. **Y:** Parts Name **Z:** Position of Parts

FM MPX. BLOCK ⟨F-1239-1D⟩

X	Y		Z
R401	1kΩ	(0100102)	1 C
R402	100kΩ	(0100104)	1 C
R403	15kΩ	(0100153)	1 C
R404	22kΩ	(0100223)	1 C
R405	68kΩ	(0100683)	1 C
R406	100kΩ	(0100104)	1 B
R407	100kΩ	(0100104)	1, 2 B
R408	4.7kΩ	(0100472)	1 B
R409	100kΩ	(0100104)	1 B
R410	2.2kΩ	(0100222)	1 B
R411	22kΩ	(0100223)	1 B
R412	330Ω	(0100331)	1 B
R413	220kΩ	(0100224)	1 B
R414	47kΩ	(0100473)	1, 2 C
R415	2.2kΩ	(0100222)	2 C
R416	47kΩ	(0100473)	2 B
R417	22kΩ	(0100223)	2 B
R418	22kΩ ±10% ¼W CB.	(0100223)	2 B
R419	3.3kΩ	(0100332)	1, 2 B
R420	4.7Ω	(0100479)	2 B
R421	47Ω	(0100470)	1 B
R422	220kΩ	(0100224)	2 A
R423	10kΩ	(0100103)	1, 2 A
R424	10kΩ	(0100103)	1 A
R425	220kΩ	(0100224)	1 B
R426	220kΩ	(0100224)	2 B
R427	10kΩ	(0100103)	2 A
R428	10kΩ	(0100103)	2 A
R429	220kΩ	(0100224)	2 A
R430	56kΩ	(0100563)	2 A
R431	56kΩ	(0100563)	2 A
R432	15kΩ	(0100153)	2 A
R433	15kΩ	(0100153)	2 A
R434	47kΩ	(0100473)	1, 2 B
VR401	200kΩ(B) Stereo Indicator Adj.	(1032150)	2 B
C401	68 pF ±10% 50 V CE.	(0660680)	1 C
C402	10μF 10 V EL.	(0511100)	1 C
C403	10000 pF ± 5 % 50 V ST.	(0620103)	1 C
C404	0.022μF ±10% 50 V MY.	(0601227)	1 B
C405	4700 pF ± 5 % 50 V ST.	(0620472)	1 A, B
C406	1μF 50 V EL.	(0515109)	2 B
C407	47μF 25 V EL.	(0513470)	1 C
C408	10000 pF ± 5% 50 V ST.	(0620103)	2 C
C409	2200 pF	(0620222)	2 C
C410	270 pF	(0620271)	2 C
C411	10μF 25 V EL.	(0513100)	1 A
C412	1μF 50 V EL.	(0515109)	2 C
C413	680 pF ± 5% 50 V ST.	(0620681)	1 A
C414	680 pF	(0620681)	2 B
C415	0.15μF ±10% 50 V MY.	(0601158)	1 A
C416	0.15μF	(0601158)	2 A
C417	0.006μF ± 5% 50 V MY.	(0600406)	2 A
C418	0.006μF	(0600406)	2 A
C419	1μF 50 V EL.	(0515109)	2 A

X	Y		Z
TR401	2SC711 (F,G)	(0305732, 3)	1 C
TR402	2SC711 (F,G)		1 B
TR403	2SC711 (F,G)		2 B
TR404	2SC711 (F,G)		2 B
TR405	2SC733 (Y)	(0305371)	2 B
TR406	2SC735 (O,Y)	(0305640, 1)	1, 2 B
D401	IN34A	(0310400)	1 B
D402	IN34A		1 B
D403	IN34A (Y)	(0310401)	1 A
D404	IN34A (Y)		1 A
D405	IN34A (Y)		1 A
D406	IN34A (Y)		1 A
T401	19kHz Coil	(4240580)	1 B
T402	38kHz Coil	(4240600)	1 A
L401	19kHz Coil	(4240590)	2 C
L402	Micro Inductor	(4900100)	1, 2 C
L403	67kHz Coil	(4240410)	2 C

www.hifiengine.com

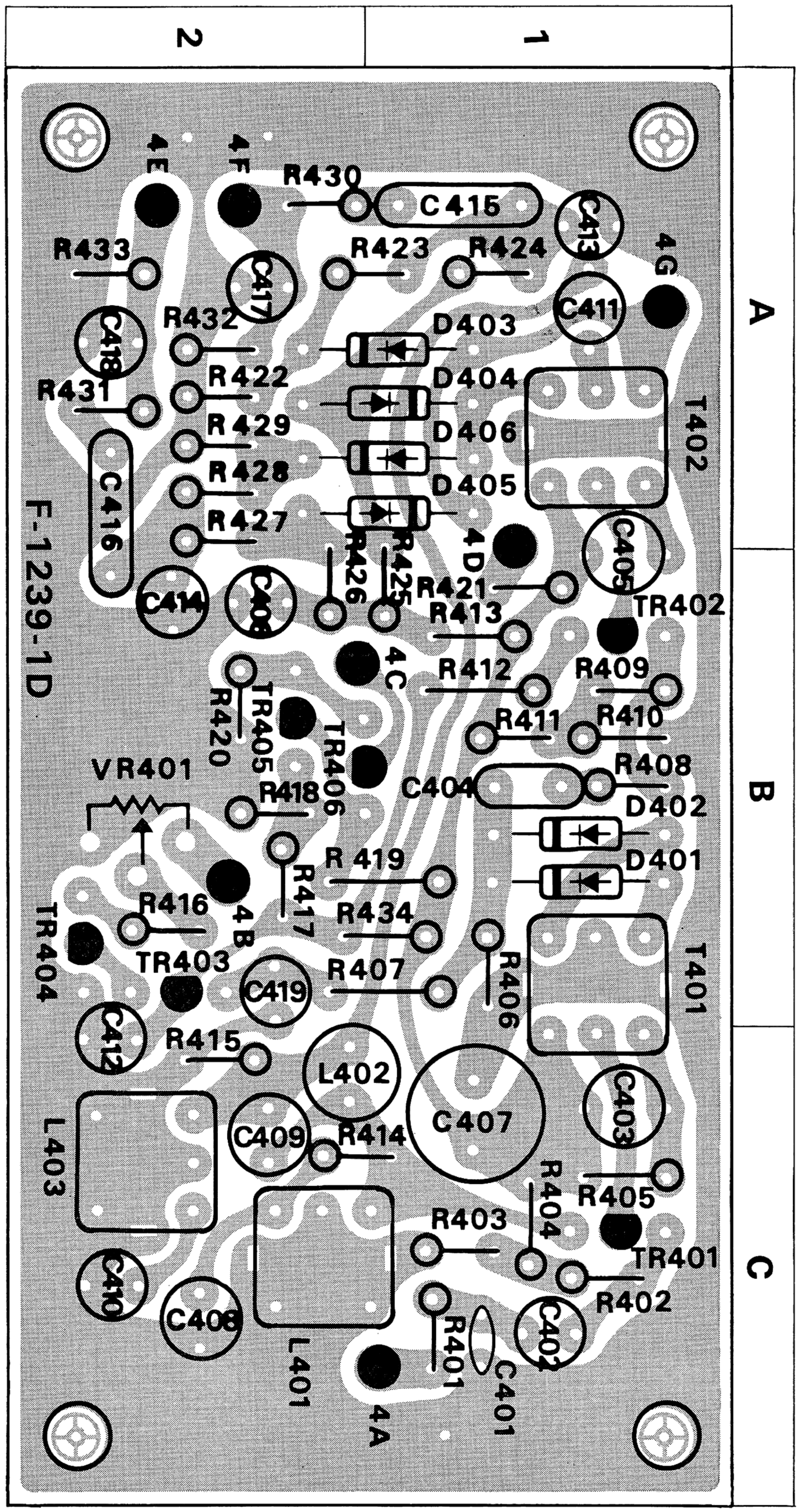
2
1
A
B
C
F-1239-1D
4E
4F
R430
C415
C413
4G
R433
R423
R424
C417
C411
R432
D403
C418
R422
D404
R431
R429
D406
T402
R428
D405
C416
R427
R426
R425
4D
C405
C414
C408
R421
TR402
R413
4C
R412
R409
R420
TR405
TR406
R411
R410
VR401
R418
C404
R408
D402
R419
D401
R417
R416
4B
R434
TR404
TR403
C419
R407
R406
T401
C412
R415
L402
C407
C403
L403
C409
R414
R404
R405
R403
TR401
C410
C408
R402
R401
C402
L401
C401
4A

PRINTED CIRCUIT BOARDS AND PARTS LIST

X: Parts No. **Y:** Parts Name **Z:** Position of Parts

HEAD AMP. BLOCK ⟨F-1249⟩

X	Y				Z
R601	1kΩ			(0101102)	2 A
R602	1kΩ			(0101102)	1 A
R603	680kΩ			(0101684)	2 A
R604	680kΩ			(0101684)	1 A
R605	220kΩ			(0101224)	2 A
R606	220kΩ			(0101224)	1 A
R607	2.2kΩ			(0101222)	2 A
R608	2.2kΩ			(0101222)	1 A
R609	5.6kΩ			(0101562)	2 A, B
R610	5.6kΩ			(0101562)	1 A, B
R611	680Ω			(0101681)	2 B
R612	680Ω			(0101681)	1 B
R613	82kΩ	±10% ¼W	CB.	(0101823)	2 B
R614	82kΩ			(0101823)	1 B
R615	820kΩ			(0101824)	2 A
R616	820kΩ			(0101824)	1 A
R617	820kΩ			(0101824)	1, 2 B
R618	820kΩ			(0101824)	1 C
R619	8.2kΩ			(0101822)	2 B
R620	8.2kΩ			(0101822)	1 C
R621	470Ω			(0101471)	2 A
R622	470Ω			(0101471)	1 A
R623	22kΩ			(0101223)	2 B
R624	22kΩ			(0101223)	1 C
R625	220Ω			(0101221)	1 B
R626	220Ω			(0101221)	1 B
VR601	5kΩ (B)	Separation Adj.		(1030370)	1 C
C601	1μF	+40% −20%	25V TA.	(0573109)	2 A
C602	1μF				1 A
C603	100pF	±10%	50V CE.	(0660101)	2 A
C604	100pF				1 A
C605	220μF		6.3V EL.	(0510221)	2 A
C606	220μF			(0510221)	1 A
C607	3.3μF		25V EL.	(0513339)	2 A, B
C608	3.3μF			(0513339)	1 A, B
C609	47μF		6.3V EL.	(0510470)	2 B
C610	47μF			(0510470)	1 B
C611	0.01μF			(0601107)	1, 2 B
C612	0.01μF	±10%	50V MY.	(0601107)	1 C
C613	0.0033μF			(0601336)	2 B
C614	0.0033μF			(0601336)	1 C
C615	220μF		25V EL.	(0513221)	1 B
TR601	2SC871R (E, F)			(0305474, 5)	2 A
TR602	2SC871R (E, F)				1 A
TR603	2SC871 (E, F)			(0305471, 2)	2 A
TR604	2SC871 (E, F)				1 A

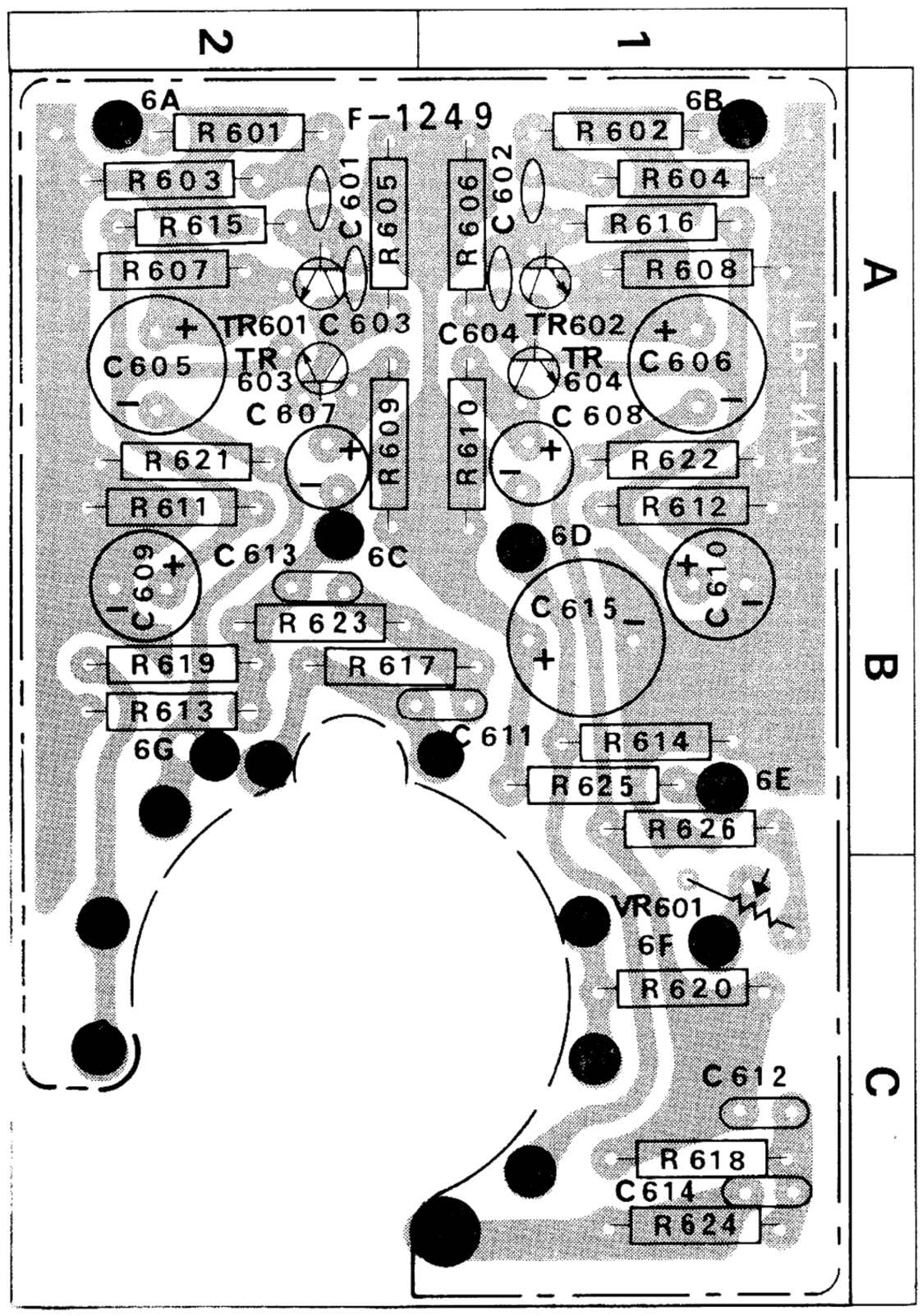

TONE CONTROL BLOCK ⟨F-1248⟩

X	Y				Z
R701	33kΩ			(0101333)	1 D
R702	33kΩ			(0101333)	1 D
R703	1kΩ			(0101102)	2 C
R704	1kΩ			(0101102)	2 C
R705	1MΩ			(0101106)	1 D
R706	1MΩ			(0101106)	1 D
R707	4.7kΩ			(0101472)	1 D
R708	4.7kΩ	±10% ¼W	CB.	(0101472)	1 D
R709	470Ω			(0101471)	1 D
R710	470Ω			(0101471)	2 D
R711	82kΩ			(0101823)	1 C
R712	82kΩ			(0101823)	1 C
R713	18kΩ			(0101183)	2 B
R714	18kΩ			(0101183)	2 C
R715	3.3kΩ			(0101332)	1 A
R716	3.3kΩ			(0101332)	1 A

www.hifiengine.com

X	Y					Z
R717	22kΩ				(0101223)	2 A
R718	22kΩ				(0101223)	1 A
R719	100kΩ				(0101104)	1 B, C
R720	100kΩ				(0101104)	2 B, C
R721	82kΩ				(0101823)	1 B
R722	82kΩ				(0101823)	2 A, B
R723	22kΩ				(0101223)	1 B
R724	22kΩ				(0101223)	1, 2 B
R725	470Ω	±10%	¼W	CB.	(0101471)	1 B
R726	470Ω				(0101471)	1 A
R727	2.2kΩ				(0101222)	1 B, C
R728	2.2kΩ				(0101222)	1 B, C
R729	100kΩ				(0101104)	1 A
R730	100kΩ				(0101104)	1 A
R731	12kΩ				(0101123)	2 B
R732	12kΩ				(0101123)	1 A
R733*	220Ω				(0101221)	1 B, C
VR701,702	125kΩ (MN)				(1010220)	2 D
VR703,704	250kΩ (B) × 2				(1010200)	2 C
VR705,706	100kΩ (A) × 2				(1010230)	2 B
VR707,708	100kΩ (A) × 2					2 A
C701	150pF	±10%	50V	MC.	(0641151)	2 C
C702	150pF					2 D
C703	0.01μF	±10%	50V	MY.	(0601107)	1 D
C704	0.01μF					1 D
C705	1μF		50V	EL.	(0515109)	2 D
C706	1μF					2 C
C707	22pF	±10%	50V	CE.	(0660220)	1 C
C708	22pF					1 C
C709	3.3μF		25V	EL.	(0513339)	1 C
C710	3.3μF					1 C
C711	0.001μF				(0601106)	2 B
C712	0.001μF	±10%	50V	MY.	(0601106)	2 B
C713	0.01μF				(0601107)	2 A
C714	0.01μF				(0601107)	2 B
C715	0.015μF				(0601157)	2 B
C716	0.015μF	±10%	50V	MY.	(0601157)	2 A
C717	0.1μF				(0601108)	2 A
C718	0.1μF				(0601108)	1 A
C719	1μF		50V	EL.	(0515109)	1 B, C
C720	1μF					1 A
C721	22pF	±10%	50V	CE.	(0660220)	1 B
C722	22pF					1 A, B
C723	10μF		10V	EL.	(0511100)	1 B
C724	10μF					1, 2 B
C725	1μF		50V	EL.	(0515109)	1 B
C726	1μF					1 B
C727	330pF	±10%	50V	MC.	(0641331)	2 B
C728	330pF					2 B
C729	47μF		25V	EL.	(0513470)	1 C
TR701	2SC458LG (B, C)					1 C
TR702	2SC458LG (B, C)				(0305313, 4)	1, 2 C
TR703	2SC458LG (B, C)					1 B
TR704	2SC458LG (B, C)					1 A

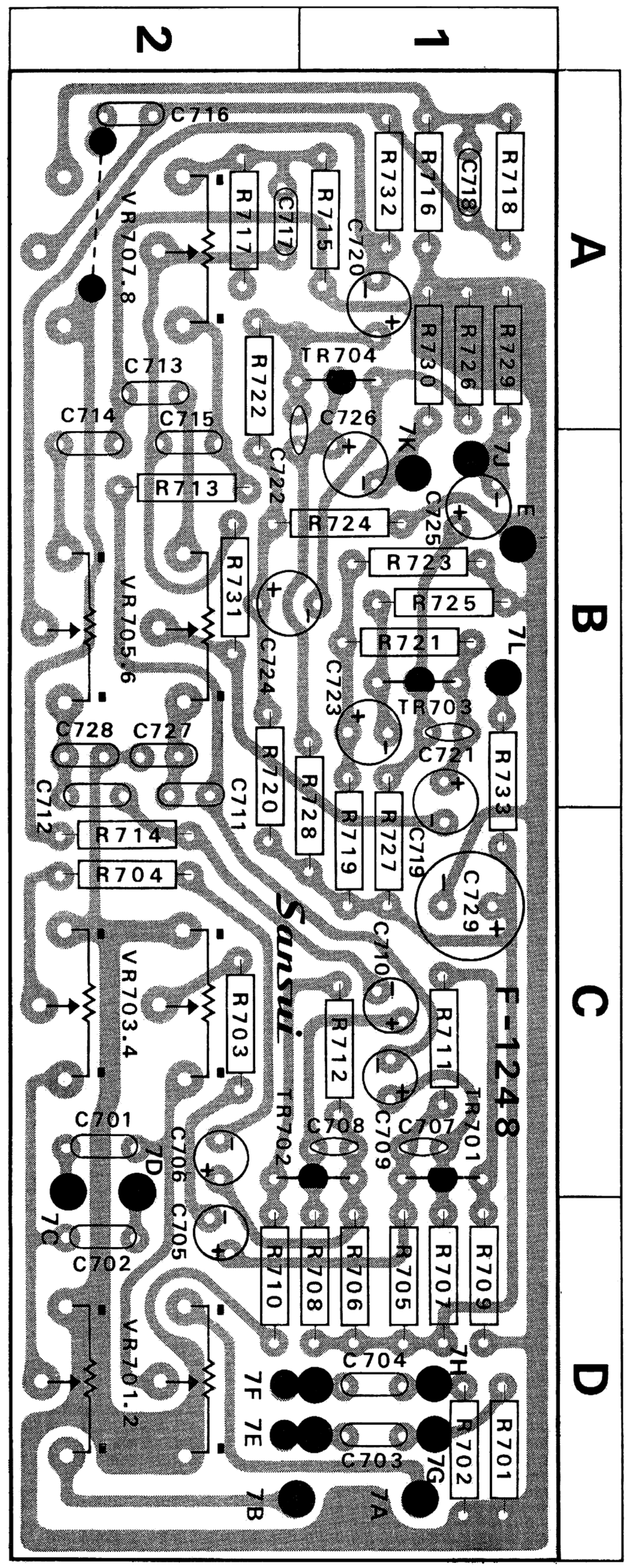

PRINTED CIRCUIT BOARDS AND PARTS LIST

X: Parts No. **Y:** Parts Name **Z:** Position of Parts

DRIVER BLOCK ⟨F-1250⟩

X	Y			Z
R801	1kΩ		(0101102)	1 B, C
R802	1kΩ		(0101102)	1 A, B
R803	470kΩ		(0101474)	1 C
R804	470kΩ		(0101474)	1 A
R805	220kΩ		(0101224)	1 C
R806	220kΩ		(0101224)	1 A
R807	3.3kΩ		(0101332)	1 C
R808	3.3kΩ		(0101332)	1 A
R809	3.3kΩ		(0101332)	1 C
R810	3.3kΩ		(0101332)	1 A
R811	680Ω		(0101681)	1 C
R812	680Ω		(0101681)	1 A
R813	18kΩ		(0101183)	1 C
R814	18kΩ		(0101183)	1 A
R815	1.8kΩ		(0101182)	1 B, C
R816	1.8kΩ		(0101182)	1 A, B
R817	10kΩ		(0101103)	1 C
R818	10kΩ		(0101103)	1 A
R819	15kΩ		(0101153)	1 C
R820	15kΩ		(0101153)	1 A
R821	3.3kΩ	±10% ¼W CB.	(0101332)	1, 2 C
R822	3.3kΩ		(0101332)	1, 2 A
R823	330Ω		(0101331)	2 C
R824	330Ω		(0101331)	2 A
R825	2.2kΩ		(0101222)	2 B, C
R826	2.2kΩ		(0101222)	2 A, B
R827	1.2kΩ		(0101122)	2 C
R828	1.2kΩ		(0101122)	2 A
R829	150Ω		(0101151)	2 B
R830	150Ω		(0101151)	2 B
R831	39Ω		(0101390)	2 C
R832	39Ω		(0101390)	2 A
R833	4.7Ω		(0101479)	2 B
R834	4.7Ω		(0101479)	2 B
R835	220Ω		(0101221)	2 C
R836	220Ω		(0101221)	2 A, B
R837	220Ω		(0101221)	2 C
R838	220Ω		(0101221)	2 A
R839	4.7Ω		(0101479)	2 C
R840	4.7Ω		(0101479)	2 A
R841	0.5Ω			2 B, C
R842	0.5Ω			2 A, B
R843	0.5Ω	±10% 2W CM.	(0152508)	2 C
R844	0.5Ω			2 A
R845	6.8Ω	±10% ½W SL.	(0111689)	2 C
R846	6.8Ω			2 A
R847	4.7kΩ		(0101472)	1 B
R848	4.7kΩ	±10% ¼W CB.	(0101472)	1 B
R849	4.7Ω		(0101479)	2 C
R850	4.7Ω		(0101479)	2 A
VR801	200kΩ (B)	AC Balance Adj.	(1030350)	1 C
VR802	200kΩ (B)	AC Balance Adj.	(1030350)	1 A
C801	0.22μF	±10% 50V MY.	(0601228)	1 C
C802	0.22μF			1 A

X	Y			Z
C803	15pF	±10% 50V CE.	(0660150)	1 C
C804	15pF			1 A
C805	220μF	6.3V EL.	(0510221)	1 C
C806	220μF			1 A
C807	1μF		(0515109)	1 C
C808	1μF		(0515109)	1 A
C809	4.7μF	50V EL.	(0515479)	1 C
C810	4.7μF		(0515479)	1 A
C811	3.3μF		(0515339)	1 B
C812	3.3μF		(0515339)	1 B
C813	33pF	±10% 50V CE.	(0660330)	1 C
C814	33pF			1 A
C815	100μF	6.3V EL.	(0510101)	2 C
C816	100μF			2 A
C817	0.047μF	±10% 50V MY.	(0601477)	2 C
C818	0.047μF			2 A
C819	1000μF	35V EL.	(0549004)	1, 2 B
C820	1000μF			1, 2 B
C821	47μF		(0515470)	1 B
C822	3.3μF	50V EL.	(0515339)	1 B
C823	220μF		(0515221)	1 B
C825	47pF	±10% 50V CE.	(0660470)	
C826	47pF			
TR801	2SC458LG (B, C)	(0315313, 4)		1 C
TR802	2SC458LG (B, C)			1 A
TR803	CDC8002-1 (B, C)	(0305551, 2)		2 C
TR804	CDC8002-1 (B, C)			2 A
TR805	CDC8002-1 (B, C)			2 B
TR806	CDC8002-1 (B, C)			2 B
TR807	CDC9002-1 (B, C)	(0300141, 2)		2 C
TR808	CDC9002-1 (B, C)			2 A
TR809	2SC1030 (B. C)	(0305631, 2)		
TR810	2SC1030 (B, C)			
TR811	2SC1030 (B, C)			
TR812	2SC1030 (B, C)			
TR813	2SC281 (C)	(0305122)		2 C
TR814	2SC281 (C)			2 A
TR815	2SC815 (L, K)	(0305431, 2)		1 B

www.hifiengine.com

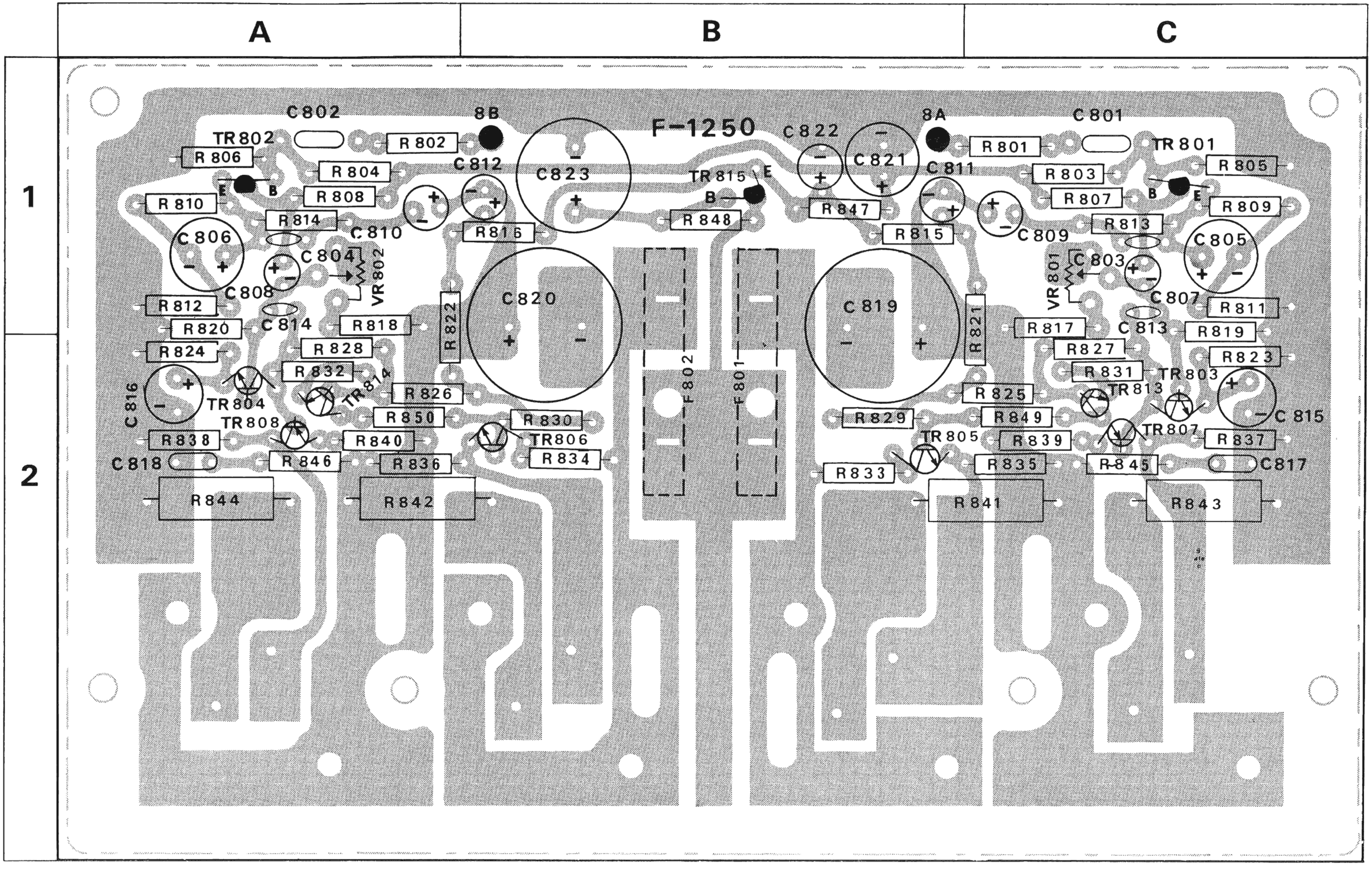

www.hifiengine.com

PRINTED CIRCUIT BOARDS AND PARTS LIST

X: Parts No. **Y:** Parts Name **Z:** Position of Parts

POWER BLOCK ⟨F-1324-1⟩

X	Y					Z
R001	12kΩ	±10%	½W	SL.	(0111123)	1 A
R002	560Ω	±10%	1 W	CB.	(0104561)	1 A, B
C003	0.0022μF	±20%	500V	CE.	(0653223)	1 B
C004	0.0022μF					1 A
C005	220μF		50V	EL.	(0515221)	1 B
C006	1000μF		10V		(0511102)	1 B
C007	470μF		16V		(0512471)	1 B
TR001	2SC1061 (A, B, C)				(0305770, 1, 2)	1 A
D001	10DC (N)				(0310680)	1 A
D002	10D-1				(0310340)	1 B
ZR001	ZBI-25				(0310710)	1 A

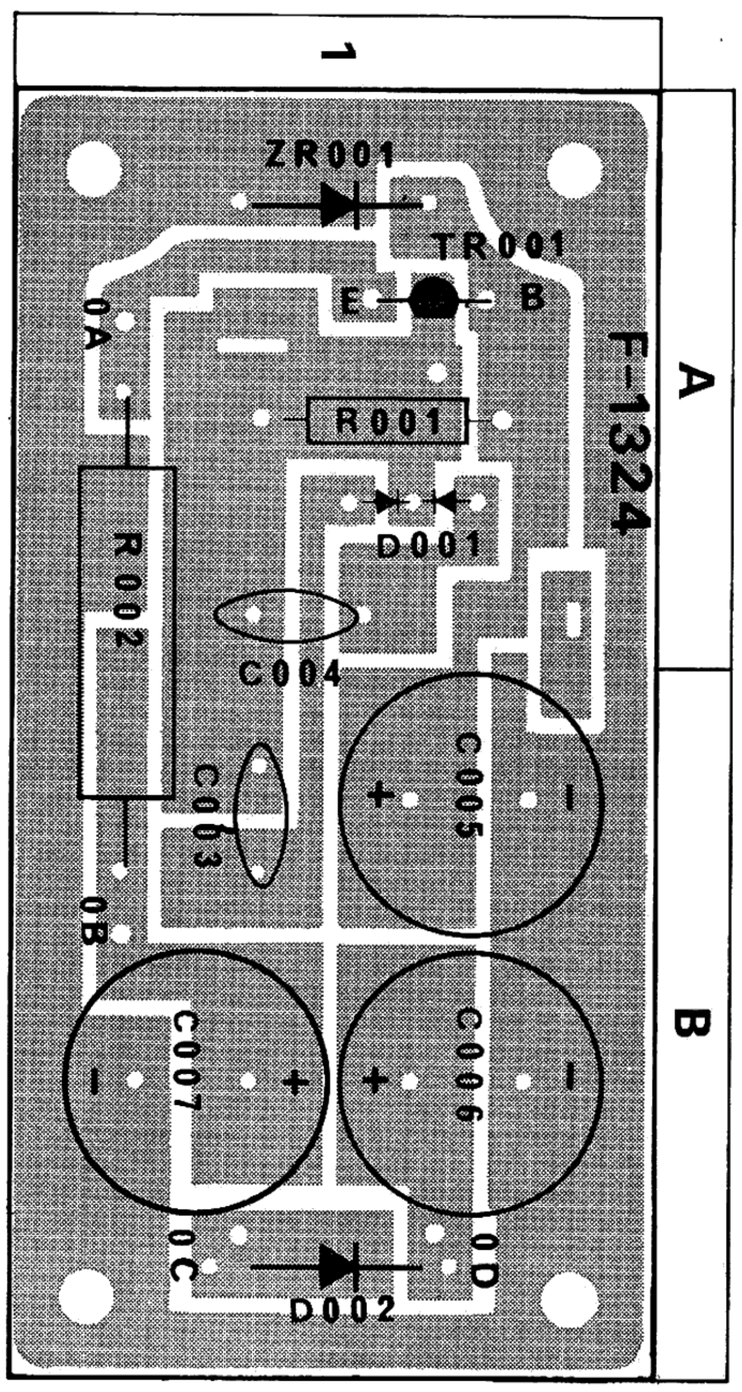

OTHER PARTS

X	Y				
R003	330Ω	±10%	½W	SL.	(0111331)
R004	330Ω				
R005	8.2kΩ				(0101822)
R006	8.2kΩ				(0101822)
R007	100kΩ				(0101104)
R008	100kΩ				(0101104)
R009	4.7kΩ				(0101472)
R010	4.7kΩ				(0101472)
R011	68kΩ				(0101683)
R012	68kΩ				(0101683)
R013	390kΩ	±10%	¼W	CB.	(0101394)
R014	390kΩ				(0101394)
R015	100kΩ				(0101104)
R016	100kΩ				(0101104)
R017	1kΩ				(0101102)
R018	3.3kΩ				(0101332)
R019	680Ω				(0101681)
R020	68Ω				(0101680)
R021	680Ω	±10%	½W	SL.	(0111681)
R022	680Ω				(0111681)
R023	1.5kΩ	±10%	¼W	CB.	(0101152)
R024	18Ω				(0101180)
R255	820Ω				(0101821)
R256	33Ω				(0101330)
R257	820Ω	±10%	¼W	CB.	(0101821)
R258	10kΩ				(0101103)
R444	180kΩ				(0101184)
C001	0.022μF	±20%	600V	O.	(0591227)
C002	2200μF		80 V	EL.	(0559821)
C008	0.0015μF	±10%	50 V	MY.	(0601156)
C256	0.02μF	+80 −20%	25 V	CE.	(0659005)
C257	0.047μF				(0659005)
C258	0.047μF				(0659005)
C625	0.015μF	±10%	50 V	MY.	(0601157)
D218	IN 60				(0310330)
TR207	2SC 711(E, F)				(0305731,2)
S1(a~f)	Selector Switch Y-3-7-4				(1103280)
S2	Antenna Att. Switch				(1110040)
S3(a,b)	Tape Monitor Switch				
S4(a,b)	Loudness Switch				
S5(a,b)	Mode Switch				(1170170)
S6(a,b)	MPX Noise Canceler Switch				
S7(a,b)	Speaker Selector Switch				(1170180)
S8	Power Switch				(1130160)
J001	Headphones Jack				(2430060)
M001	Tuning Meter				(4300200)
PT001	Power Transformer 400-5407				(4000730)
PU001	Voltage Selector				(2410170~2410190)
F001	2A Fuse (100~127V)				(0430030)
	1.5A Fuse (220~250V)				(0430120)
CO001	AC Outlet				(2450010)
PL001~005	6.3V 0.25A Pilot Lamp				(0420020)
PL006	8V 0.15A Stereo Indicator				(0400120)
PL007	5V 0.06A Needle Indicator				(0400101)
PL008	6.3V 0.25A Pilot Lamp				(0400090)
L001	75Ω : 300Ω High Frequency Transformer				(4290021)
L002	AM Bar Antenna				(4200350)
L003	150μH Ferri Inductor				(4900080)
L212	3.5μH Choke Coil				(4290010)
CF201	10.7MHz Ceramic Filter				(0910100)

* Design and specifications subject to change without notice for improvements.

www.hifiengine.com

OTHER PARTS AND THEIR POSITION ON CHASSIS

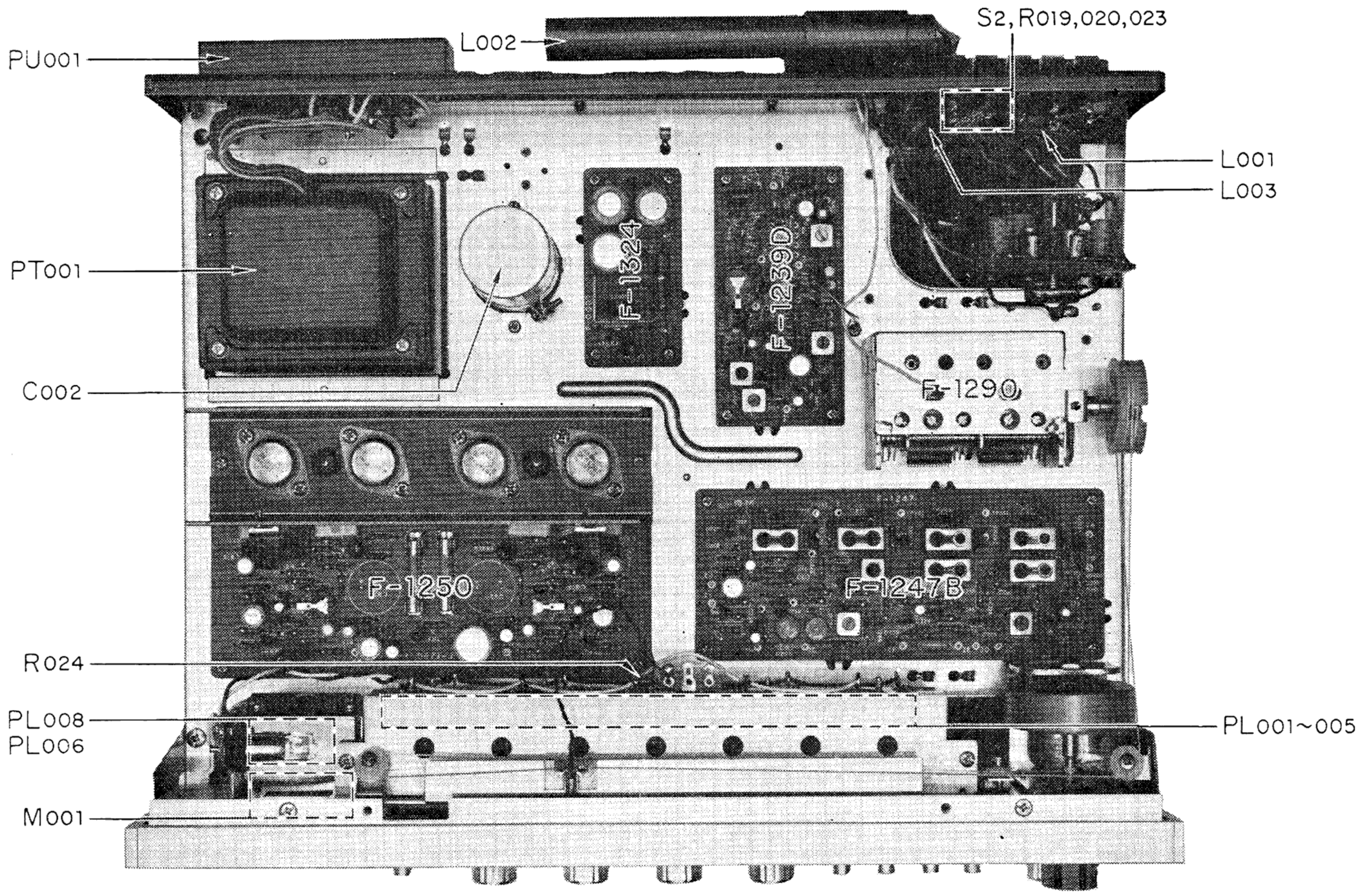

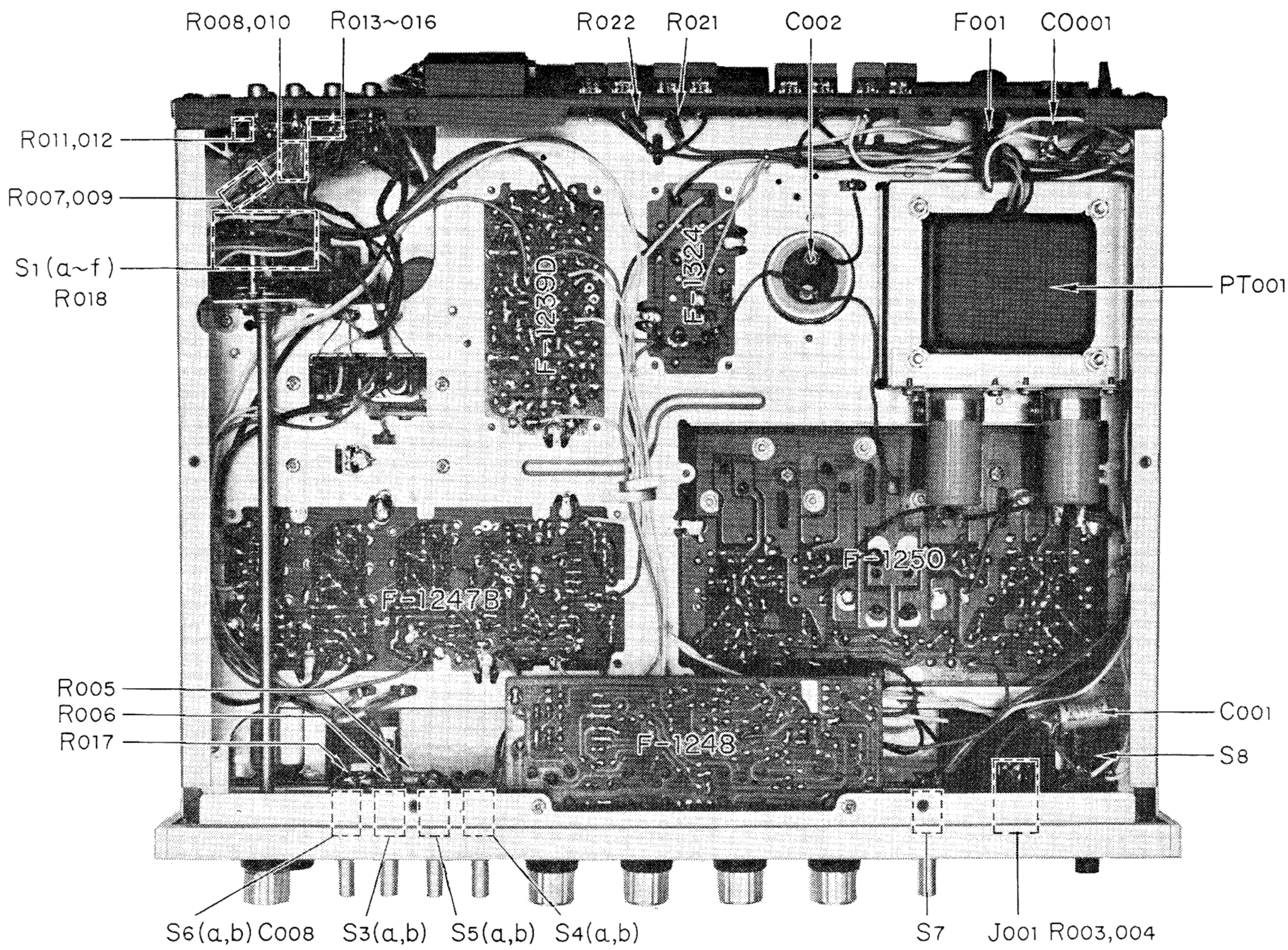

Sansui

SANSUI ELECTRIC CO., LTD.
14-1, 2-chome, Izumi, Suginamiku, Tokyo 168, Japan.
TELEPHONE: (03) 323-1111/TELEX: 232-2076

Stock No. 9216620

Printed in Japan (22910M9)

www.hifiengine.com